Yale®



EN Translated Operating Instructions
(Also applicable for special versions)

Ratchet lever hoist

Yale*handy*

WLL 250 / 500 kg

Yale®

EN – Operating, Maintenance & Parts Manual (Also applicable for special versions)

Ratchet lever hoist

Yale*handy*

Ident-No: 85006117/2019.05

COLUMBUS McKINNON

English

EN

INTRODUCTION

Products of CMCO Industrial Products GmbH have been built in accordance with the state-of-the-art and generally accepted engineering standards. Nonetheless, incorrect handling when using the products may cause dangers to life and limb of the user or third parties and/or damage to the hoist or other property. The operating company is responsible for the proper and professional instruction of the operating personnel. For this purpose, all operators must read these operating instructions carefully prior to the initial operation.

These operating instructions are intended to acquaint the user with the product and enable him to use it to the full extent of its intended capabilities. The operating instructions contain important information on how to operate the product in a safe, correct and economic way. Acting in accordance with these instructions helps to avoid dangers, reduce repair costs and downtimes and to increase the reliability and lifetime of the product. The operating instructions must always be available at the place where the product is operated. Apart from the operating instructions and the accident prevention act valid for the respective country and area where the product is used, the commonly accepted regulations for safe and professional work must also be adhered to. The personnel responsible for operation, maintenance or repair of the product must read, understand and follow these operating instructions.

The indicated protective measures will only provide the necessary safety, if the product is operated correctly and installed and/or maintained according to the instructions. The operating company is committed to ensure safe and trouble-free operation of the product.

CORRECT OPERATION

- The unit is used for lifting, lowering, pulling and tensioning of loads.
- **Any different or exceeding use is considered incorrect. Columbus McKinnon Industrial Products GmbH will not accept any liability for damage resulting from such use. The risk is borne by the user or operating company alone.**
- The load capacity indicated on the unit is the maximum working load limit (WLL) that may be attached.
- If the hoist is to be used for frequent lowering from large heights or in indexed operation, first consult the manufacturer for advice because of possible overheating.
- The top hook and the load hook of the unit must be in a vertical line above the load centre of gravity (S) when the load is lifted, in order to avoid load sway during the lifting process (Fig. 1).
- The selection and calculation of the appropriate supporting structure are the responsibility of the operating company.
- The operator must ensure that the hoist is suspended in a manner that makes it possible to operate the unit without exposing himself or other personnel to danger by the unit itself, the suspension or the load.
- The operator may start moving the load only after it has been attached correctly and all persons are clear of the danger zone.
- Do not allow personnel to stay or pass under a suspended load.
- A lifted or clamped load must not be left unattended or remain lifted or clamped for a longer period of time.
- The hoist may be used at ambient temperatures between –10 °C and +50 °C.
  Consult the manufacturer in the case of extreme working conditions.

  ATTENTION: *Before use at ambient temperatures of less than 0 °C, check the brake for freezing by lifting and lowering a small load 2 - 3 times.*
- Prior to operation of the hoist in special atmospheres (high humidity, salty, caustic, alkaline) or handling hazardous goods (e.g. molten compounds, radioactive materials), consult the manufacturer for advice.
- Always transport the load in the horizontal direction slowly, carefully and close to the ground.
- For attaching a load, only approved and certified lifting tackle must be used.
- Correct operation involves compliance with the operating instructions and in addition also compliance with the maintenance instructions.
- In case of functional defects or abnormal operating noise, stop using the hoist **immediately**.

INCORRECT OPERATION

(List not complete)

- Do not exceed the rated load capacity (WLL) of the unit and/or the suspension and the supporting structure.
- The unit must not be used for pulling free fixed loads. It is also prohibited to allow loads to drop when the chain is in a slack condition (danger of chain breakage).
- Removing or covering labels (e.g. by adhesive labels), warning information signs or the identity plate is prohibited.
- When transporting loads ensure that the load does not swing (Fig. 2) or come into contact with other objects.
- The load must not be moved into areas which are not visible to the operator. If necessary, he must ensure he is given help.
- Driving the unit with a motor is not allowed.
- The lever must not be extended (Fig. 3). Only original hand levers must be used.
- The unit must never be operated with more than the power of a person.
- Welding on hook and load chain is strictly forbidden. The load chain must never be used as a ground connection during welding (Fig. 4).
- Side pull, i. e. side loading of either the housing or the bottom block (Fig. 5) is forbidden.
- The load chain must not be used as a chain sling (Fig. 6).
- A unit changed without consulting the manufacturer must not be used.
- Do not use the hoist for the transportation of people (Fig. 7).
- Do not knot the load chain or connect it by using pins, bolts, screw drivers or similar. Do not repair load chains installed in the hoist (Fig. 8).
- Removing the safety latches from top and/or load hooks is forbidden (Fig. 9).
- Never attach the load to the tip of the hook (Fig. 10). The lifting tackle must always be seated in the saddle of the hook.
- Do not use the chain stop (Fig. 11) as an operational limit device.
- Turning of loads under normal operating conditions is not allowed, as the bottom blocks of the hoists are not designed for this purpose. If loads must be turned in normal operation, an anti-twist swivel must be used or the manufacturer must be consulted.
- Only one load lifting attachment may be suspended in the load hook of the hoist.
- Never reach into moving parts.
- Do not allow the unit to fall from a large height. Always place it properly on the ground.
- The unit must not be used in potentially explosive atmospheres.

INSPECTION BEFORE INITIAL OPERATION

Prior to initial operation, before it is put into operation again and after substantial changes, the product including the supporting structure must be inspected by a competent person*. The inspection mainly consists of a visual inspection and a function check. These inspections are intended to establish that the hoist is in a safe condition, has been set up appropriately and is ready for operation and that any defects or damage are detected and eliminated, as required.

**Competent persons may be, for example, the maintenance engineers of the manufacturer or the supplier. However, the company may also assign performance of the inspection to its own appropriately trained specialist personnel.*

Before putting the unit into operation, check functioning of the chain drive in unloaded condition.

INSPECTIONS BEFORE STARTING WORK

Before starting work, inspect the unit including the suspension, equipment and supporting structure for visual defects, e. g. deformations, damage, cracks, wear and corrosion marks. In addition also test the brake and check that the hoist and the load are correctly attached.

Checking the brake function

Before starting work, always check operation of the brake:
To do this, lift, pull or tension and lower or release a load over a short distance with the unit. When the hand lever is released, the load **must** be held in any position.
This check is intended to ensure that even at temperatures below 0 °C, the brake disks are not frozen. Repeat it at least twice, before starting further work.

ATTENTION: *If the brake does not function properly, the unit must be immediately taken out of service and the manufacturer must be contacted!*

Inspection of the attachment point

- The attachment point for the hoist must be selected so that the supporting structure to which it is to be fitted has sufficient stability and to ensure that the expected forces can be safely absorbed.
- The unit must align freely also under load in order to avoid impermissible additional loading.
- The selection and calculation of the appropriate supporting structure are the responsibility of the operating company.

Inspection of the load chain

Inspect the load chain for sufficient lubrication and check for external defects, deformations, superficial cracks, wear and corrosion marks.

Inspection of the chain stop

The chain stop must always be fitted to the free (idle) end of the chain (Fig. 11). There must be no wear or incorrect alignment.

Inspection of the top hook and load hook

The top and load hooks must be checked for cracks, deformations, damage, wear and corrosion marks. The safety latch must move freely and be fully functioning.

FUNCTION / OPERATION

Releasing the chain

Turn pawl rod lever (Fig. 11) to neutral (central) position. The chain can now be pulled in both directions and the load chain fall will be quickly tensioned.

ATTENTION: *The minimum load to engage the automatic brake lies between 30 and 45 kg.*

Lifting the load

Turn pawl rod lever to the lifting position ‚↑' and lock it (Fig. 11).
Operate hand lever with a pumping action. If work is stopped while the hoist is under load, the pawl rod lever must remain in the lifting position ‚↑'.

Lowering the load

Turn pawl rod lever to the lowering position ‚↓' and lock it (Fig. 11).
Operate hand lever with a pumping action.

Brake jamming

If a hoist, which is under load, is suddenly relieved of load pressure, e.g. by lifting off the load or when pulling down walls, and lowering has not been initiated first, the brake will remain locked. The brake will also lock if the load hook with the bottom block is pulled too tightly against the housing.

Releasing the jammed brake

Turn pawl rod lever to the lowering position ‚↓' and operate hand lever with a vigorous stroke. If the brake is jammed on extremely tight, it can be released by striking the hand lever.

INSPECTION, MAINTENANCE AND REPAIR

According to national and international accident prevention and safety regulations hoisting equipment must be inspected:

- in accordance with the risk assessment of the operating company
- prior to initial operation
- before the unit is put into service again following a shut down
- after substantial changes
- however, at least once per year, by a competent person.

ATTENTION: *Actual operating conditions (e.g. operation in galvanizing facilities) can dictate shorter inspection intervals.*

Repair work may only be carried out by a specialist workshop that uses original Yale spare parts. The inspection (mainly consisting of a visual inspection and a function check) must determine that all safety devices are complete and fully operational and cover the condition of the unit, suspension, equipment and supporting structure with regard to damage, wear, corrosion or any other alterations.
Initial operation and recurring inspections must be documented (e.g. in the CMCO works certificate of compliance).
If required, the results of inspections and appropriate repairs must be verified. If the hoist (from 1 t lifting weight) is fitted on or in a trolley and if the hoist is used to move a lifted load in one or several directions, the installation is considered to be a crane and the further inspections must be carried out, as required.

Paint damage should be touched up in order to avoid corrosion. All joints and sliding surfaces should be slightly greased. In the case of heavy contamination, the unit must be cleaned.

The unit must be given a general overhaul after 10 years, at the latest.

In particular, check the dimensions of the load chain, the load hook and the top hook. They must be compared with the dimensions specified in the table (Tab. 2, Tab. 3).

ATTENTION: *After the replacement of components, a subsequent inspection by a competent person is obligatory!*

Inspection of the load chain

(acc. to DIN 685-5)
Load chains must be inspected for mechanical damage at annular intervals, however after 50 operating hours, at the latest. Inspect the load chain for sufficient lubrication and check for external defects, deformations, superficial cracks, wear and corrosion marks.
Round steel section chains must be replaced when the original nominal thickness ´d´ on the chain link with the worst wear has been reduced by more than 10% or when the chain has elongated over one pitch ´p_n´ by 5 % (Fig. 13) or over 11 pitches (11 x p_n) by 3 %.
Nominal dimensions and wear limits are shown in table 2. If one of the limit values is reached, the load chain must be replaced.

Maintenance of the load chain

In most cases, chain wear in the link points is caused by insufficient care of the chain. In order to ensure optimal lubrication of the link contact points, lubricate the chain at regular intervals adapted to the application with creep-type lubricant (e.g. gear oil).

A dry film lubricant, e.g. PTFE spray, should be used in environments where abrasives like sand, etc., occur.

The service life of the load chain can be increased by careful lubrication to 20 - 30 times compared with a chain that is not serviced.

- When lubricating the chain, make sure the chain is in no-load condition so that the oil can reach the contact points of the chain links which are subject to wear. Chain link parts contacting each other must always be coated with lubricant, otherwise increased wear on the chain results.
- It is not sufficient to lubricate the chains on the outside as this does not ensure that a lubricant film can build up in the contact points.
- With a constant lifting path of the chain, the change-over area from lifting to lowering movement must be checked in particular.
- Make sure that the load chain is lubricated over its entire length, also including the part of the chain in the housing of the hoist.
- Clean dirty chains with petroleum or a similar cleaning agent, never heat the chain.
- When lubricating the chain, also check the chain for wear.

ATTENTION: *It must be ensured that no lubricant can penetrate into the brake enclosure. This may result in failure of the brake.*

Replacing the load chain

The load chain must be replaced by a new chain of the same dimensions and quality in the event of visible damage or deformations, however, when the discarding status has been reached, at the latest.

A load chain to be discarded must only be replaced by an authorized specialist workshop. Only fit load chains which have been approved by the manufacturer. Non-compliance with this specification will render the legal warranty or guarantee void with immediate effect.

Note: *Replacement of a load chain must be documented!*

Hoist with single fall

- Only pull in the new chain in no-load condition.
- An open load chain link is required as a tool. It can be obtained by using an abrasive wheel to cut a section from an existing link with the same dimension. The length of the cut section must at least correspond to the thickness of the link.
- Remove load hook from the old load chain and suspend open load chain link in the loose end of the load chain.
- Suspend the new, lubricated load chain also in the open link and pull it through the hoist unit (turn hand wheel clockwise).
- Do not fit a twisted chain. The welds must face outwards from the chain wheel.
- When the old load chain has passed through the hoist unit it can be detached together with the open chain link and the load hook can be fitted on the new load chain just pulled in.
- Detach the chain stop from the loose end of the old, replaced load chain and fit it to the loose end of the new load chain just pulled in.

  ATTENTION: *The chain stop must always be fitted to the loose end of the chain (idle fall) (Fig. 11).*

Inspection of the load hook and top hook

Inspect the hook for deformation, damage, surface cracks, wear and signs of corrosion, as required, but at least once a year. Actual operating conditions may also dictate shorter inspection intervals.

Hooks that do not fulfil all requirements must be replaced immediately. Welding on hooks, e.g. to compensate for wear or damage is not permissible. Top and/or load hooks must be replaced when the mouth of the hook has opened more than 10% (Fig. 14) or when the nominal dimensions have reduced by 5% as a result of wear.

Nominal dimensions and wear limits are shown in table 3. If a limit value is reached, replace the components.

Inspection of the brake

Immediately contact the manufacturer, if irregularities are found (e.g. defective friction disks). All components of the brake must be checked for wear, damage, discoloration caused by overheating and for functioning.

Friction disks must always be kept free from grease, oil, water or dirt. Check the bonding of the friction disks.

Repairs may only be carried out by authorized specialist workshops that use original Yale spare parts.

After repairs have been carried out and after extended periods of non-use, the hoist must be inspected again before it is put into service again.

The inspections have to be initiated by the operating company.

TRANSPORT, STORAGE, DECOMMISSIONING AND DISPOSAL

Observe the following for transporting the unit:

- Do not drop or throw the unit, always deposit it carefully.
- Load chains must be transported in a way to avoid knotting and formation of loops.
- Use suitable transport means. These depend on the local conditions.

Observe the following for storing or temporarily taking the unit out of service:

- Store the unit at a clean and dry place.
- Protect the unit incl. all accessories against contamination, humidity and damage by means of a suitable cover.
- Protect hooks against corrosion.
- A light oil film should be applied to the chain.
  ATTENTION: *It must be ensured that no lubricant can penetrate into the brake enclosure. This may result in failure of the brake.*
- Since the brake disks may freeze at temperature below 0 °C, the unit should be stored with closed brake. For this purpose, move the change-over lever to lifting ‚↑' and operate the hand lever with a pumping action, while holding the load fall.
- If the unit is to be used again after it has been taken out of service, it must first be inspected again by a competent person.

Disposal:

After taking the unit out of service, recycle or dispose of the parts of the unit in accordance with the legal regulations.

Further information and operating instructions for download can be found at www.cmco.eu!

Correct operation

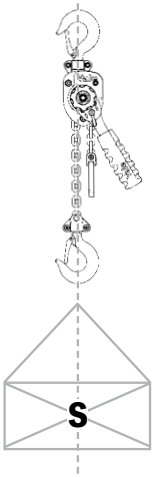

Fig. 1

Incorrect operation (Examples)

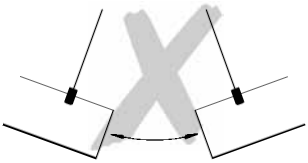

Fig. 2

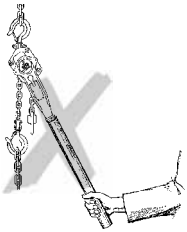

Fig. 3

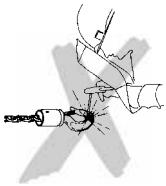

Fig. 4

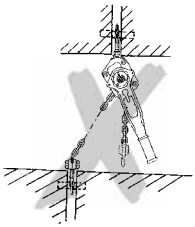

Fig. 5



Fig. 6



Fig. 7

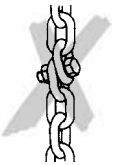

Fig. 8



Fig. 9



Fig. 10

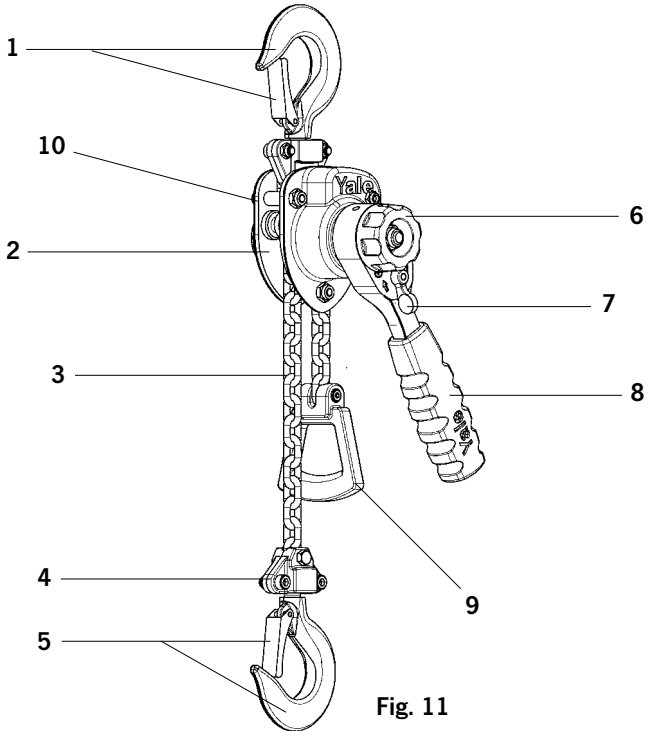

Fig. 11

Description

1 Top hook
with safety latch
2 Housing
3 Load chain
4 Bottom block
5 Load hook
with safety latch
6 Handwheel
7 Pawl rod lever
8 Hand lever
9 Chain stop
10 Gear cover

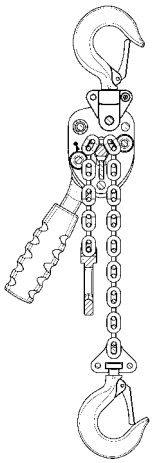

Fig. 12

250 / 500 kg

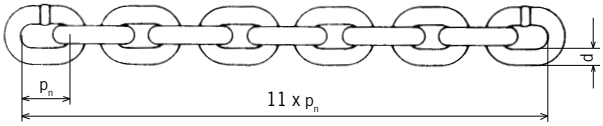

Fig. 13

d = Nominal thickness of chain

d_1, d_2 = Actual value

$$d_m = \frac{d_1 + d_2}{2} \leq 0{,}9\ d$$

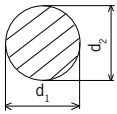

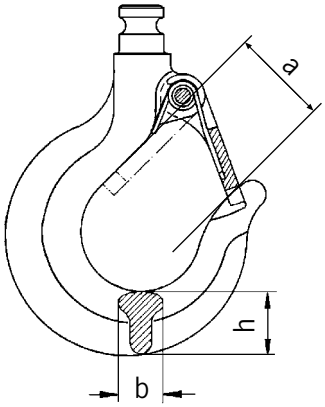

Fig. 14

Yalehandy		**250**	**500**
Capacity	[kg]	250	500
Number of chain falls		1	1
Chain dimensions d x p_n	[mm]	4,0 x 12,0	4,0 x 12,0
KMin. headroom	[mm]	240	282
Hand lever length	[mm]	160	160
Hand pull at rated load	[daN]	25,0	25,0
Net weight at standard lift	[kg]	2,2	2,8
Tensioning force S_{TF}	[daN]	250	500
Hand force S_{HF}	[daN]	25,0	25,0

Tab. 1

Nominal values and wear limitation

Yalehandy			**250**	**500**
Round link chain		[mm]	4,0 x 12,0	4,0 x 12,0
Grade			T	T
Diameter	$d_{nom.}$	[mm]	4,0	4,0
	$d_{min.}$	[mm]	3,6	3,6
Pitch	$p_{n\ nom.}$	[mm]	12,0	12,0
	$p_{n\ max.}$	[mm]	12,6	12,6
Length	11 x $p_{n\ nom.}$	[mm]	132,0	132,0
	11 x $p_{n\ max.}$	[mm]	136,0	136,0

Tab. 2

HOOk dimensiOns

Yalehandy			**250**	**500**
Hook opening	$a_{nom.}$	[mm]	21,0	24,0
Hook opening	$a_{max.}$	[mm]	23,1	26,4
Hook width	$b_{nom.}$	[mm]	14,0	12,0
Hook width	$b_{min.}$	[mm]	13,3	11,4
Hook height	$h_{nom.}$	[mm]	20,0	17,0
Hook height	$h_{min.}$	[mm]	19,0	16,2

Tab. 3

PARTS ORDERING INFORMATION

Only allow trained technicians to perform maintenance on this product.
For additional information contact COLUMBUS McKINNON or nearest distributor.

These products are designed and constructed to provide long, trouble- free service. In time it may be necessary to order and install new parts to replace those that have been subjected to wear.
For your convenience and future reference it is recommended that the following information be recorded:

Model number_____
Serial number _____
Date purchased____

When ordering replacement parts, please specify the following:
1. Model number and serial number as it appears on the name plate.
2. Part number(s) and part description as shown in this manual.
3. Quantity required.

NOTICE

When ordering replacement parts, it is recommended that consideration be given to the need for also ordering such items as nuts, bolts, cotter pins, etc. These items may be damaged or lost during disassembly or just unfit for future use because of deterioration from age or service.

Yale*handy* 250 EXPLOSION DRAWING – LEVER

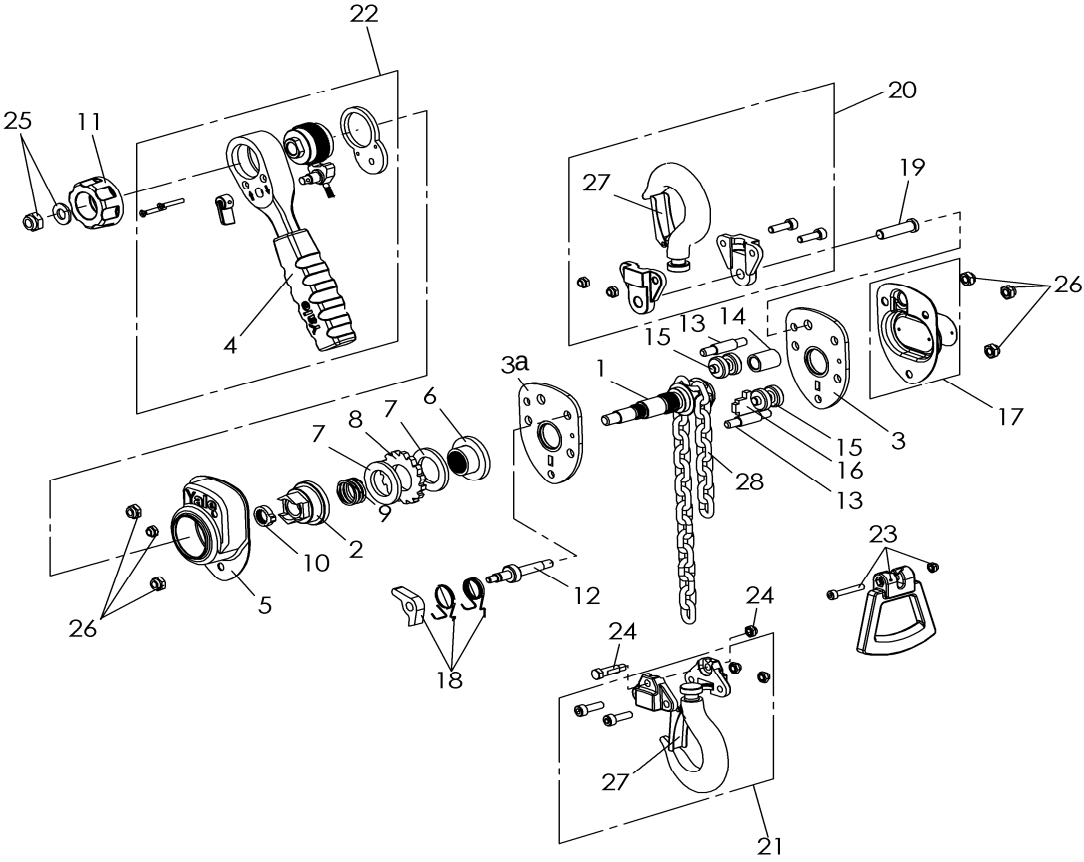

Yale*handy* 250 SPARE PARTS LIST – LEVER

Pos.	Artikel-Nr. / Part No. / Pièce No.	Description	Menge / Quantity / Quantity
1	00230161	Liftwheel	1
2	00230138	Ratchet	1
3	00230258	Sideplate assy	1
3a	80125002	Sideplate assy	1
4	00230153	Grip	1
5	00230124	Housing cover	1
6	00230113	Disc hub	1
7	00210001	Friction disc	2
8	00230114	Ratchet disc	1
9	00230130	Spring	1
10	00230117	Check washer	1
11	00230155	Hand wheel	1
12	00230120	Spacer pin	1
13	00230119	Spacer pin	2
14	00230121	Spacer tube	1
15	00230115	Guide roller	2
16	00230116	Stripper	1
17	00230320	Housing cover assy	1
18	00230259	Brake pawl assy	1
19	00230131	Suspension bolt	1
20	00230152	Hook assy	1
21	00230137	Bottom block assy	1
22	00230164	Hand lever assy	1
23	00230260	Chain end stop assy	1
24	00230261	Chain bolt assy	1
25	00230262	Hex. nut and washer	1
26	00230288	Hex. Nut	1
27	00230168	Safety latch kit	2
28	02100004	Load chain	1

Yale*handy* 500 EXPLOSION DRAWING – LEVER

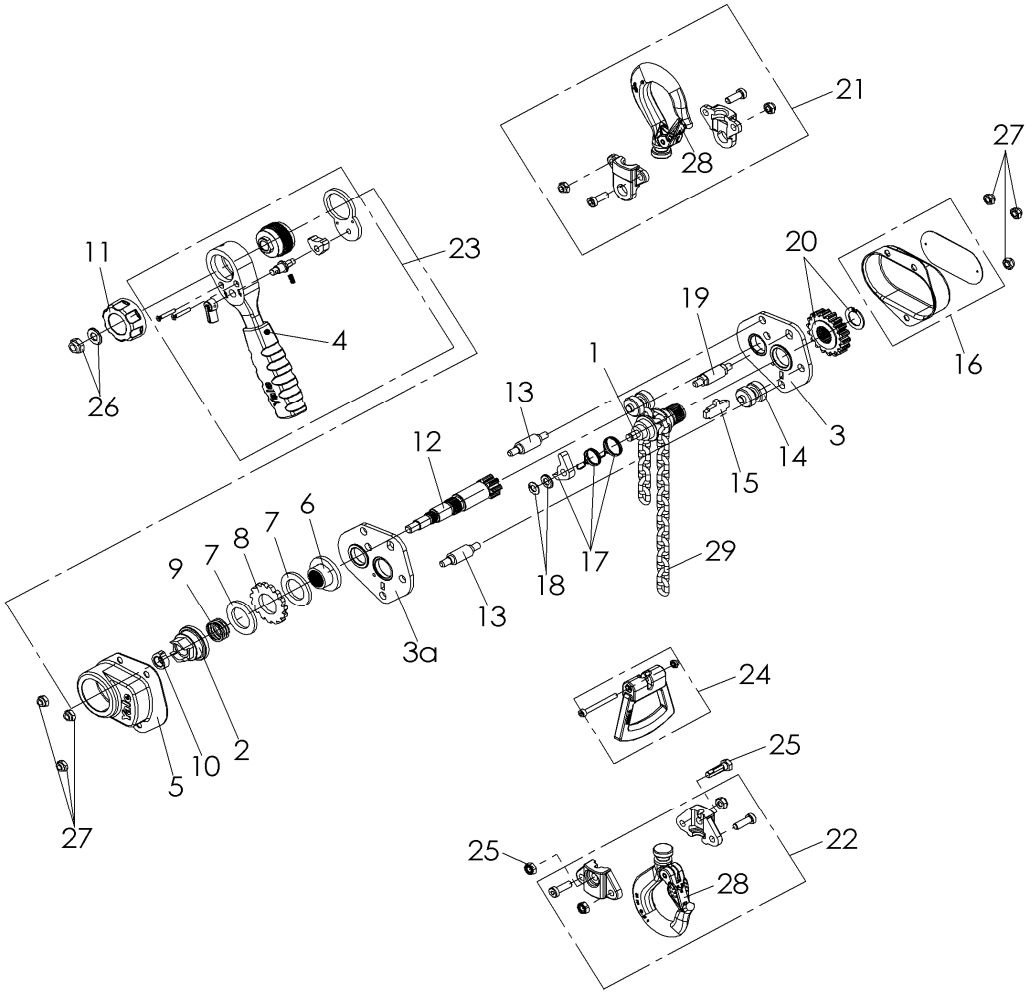

Yale*handy* 500 SPARE PARTS LIST – LEVER

Pos.	Artikel-Nr. / Part No. / Pièce No.	Description	Menge / Quantity / Quantity
1	00230329	Liftwheel	1
2	00230138	Ratchet	1
3	00230328	Sideplate assy	1
3a	00230387	Sideplate assy	1
4	00230153	Grip	1
5	00230332	Housing cover	1
6	00230113	Disc hub	1
7	00210001	Friction disc	2
8	00230114	Ratchet disc	1
9	00230130	Spring	1
10	00230117	Check washer	1
11	00230155	Hand wheel	1
12	00230330	Drive pinion	1
13	00230331	Spacer pin	2
14	00230335	Guide roller	2
15	00230340	Stripper	1
16	00230347	Housing cover assy	1
17	00230259	Brake pawl assy	1
18	00230348	Washer and retaining ring	1
19	00230336	Suspension bolt	1
20	00230350	Gear assy	1
21	00230351	Hook assy	1
22	00230342	Bottom block assy	1
23	00230164	Hand lever assy	1
24	00230260	Chain end stop assy	1
25	00230352	Chain bolt assy	1
26	00230262	Hex. nut and washer	1
27	00230288	Hex. Nut	6
28	00400449	Safety latch kit	2
29	02100004	Load chain	1
30	00230353	Sleeve	1

Singapore office
Columbus McKinnon Singapore Pte Ltd
100D, Pasir Panjang Road, #05-02
Melssa, Singapore 118520
Tel: 65 6567 2166
Fax: 65 6425 6433

India
Tel: 91 44 435239 55

Japan
Tel: 81 80 3204 5126

South Korea
Tel: 82 10 3664 0847

Indonesia
Tel: 62 812 2716033

Thailand
Tel: 66 81 542 5588

Email: inquiryasia@cmworks.com

www.cmworks.com

Subject to engineering changes and improvements.
No warranty for printing errors or mistakes.
Please contact our authorized distributor.



These subsidaries belong to the matrix-certification-system
according to EN ISO

Yale®



中文操作使用说明书及配件手册
（对特殊规格同样适用）

手扳葫芦

Yale*handy*

WLL 250 / 500 kg

Yale®

中文操作使用说明书及配件手册（对特殊规格同样适用）

Yale*handy*

零件代码: 85006117/2019.05

COLUMBUS McKINNON

目　录

1. 简介
2. 操作指示
2.1 正确的操作
2.2 不正确的操作
2.3 初次操作前的检验
2.4 使用前的检查
2.5 载重链的检查
2.6 止索环的检查
2.7 检查上下吊钩
2.8 起重链的复检
3. 功能/操作
3.1 自由链轮装置
3.2 提升货物
3.3 下降货物
3.4 刹车系统
3.5 释放刹车系统
3.6 检查/保养
4. 错误的操作图示
5. 链轮图示
6. 描述

1. 简　介

操作者在初次使用之前必须仔细阅读操作手册，此手册能使使用者掌握葫芦的基本性能并且能够合理地去使用。操作手册包含了重要的信息：如何正确，安全及经济地使用葫芦。按照操作手册的各项指示去做，能够避免危险，降低维修率，节约时间和提高葫芦的可利用性及使用寿命。除了执行操作手册条款和采用那些为了防止事故发生而采取的必要措施，我们一般也接受葫芦的使用国家和区域的安全规章和专业的操作规程。

2. 操作指示

2.1 正确的操作

– 载重力是指葫芦的安全操作的限制载重量，并且不得超出

– 当葫芦提升或是运输重物时，所有人员必须离开危险地带

– 不允许吊挂物下方有人员通过

– 重物不得长时间悬空提起

– 确保在所有人员离开危险区后方可开始移动物品

– 操作者必须保证重物的安置不会使自己及他人被葫芦，链条或者货物带来伤害

– 葫芦可以在–10℃～+50℃的环境下使用，如要在特殊条件下使用必须向生产厂家咨询。

注意：在0℃以下的温度条件下工作，要检查一下刹车器是否被冻住了。

– 必须严格遵守葫芦使用国的事故预防措施和/或安全操作规章

– 为了确保正确的操作，不仅要遵守葫芦的操作手册的条款，还要遵守保养及检查葫芦的各项要求。如果一旦发现异常情况立即停止使用

2.2 不正确的操作

– 不得超出葫芦的额定载荷

– 不能用于人的载运（如图1）

– 不可随意加长手柄（如图2）

– 吊钩和起重链的焊接是严格禁止的，不可自行焊接载重链(如图3)

– 避免斜拉，也就是说避免把重物挂在外壳或是下吊钩座上使用（如图4）

– 起重链不得捆绑物体（如图5）

– 不得使用螺栓/螺帽或其他装置使起重链打结或是缩短（如图6）。不得自行装置或修理起重链

– 不得自行拆卸上下吊钩上的保险片（如图7）

– 重物不得挂在下吊钩的顶端部分，同样也适用于上吊钩（如图8）

– 不要把止索环作为一种操作限制装置（如图10）

– 不要抛扔葫芦,请妥善保管

2.3 初次操作前的检验

每一台葫芦在第一次使用前必须由专业人员进行预检，在视觉上和功能性上检查葫芦是否由于错误的运输或者储存而遭到损坏影响葫芦的安全性.此检查应该由公司经专门培训的专业人员,厂家代表或者是供应商来做。

2.4 使用前的检查

每次开始使用葫芦前,凭肉眼检查链条和所有的起重轴承.并且测试一下刹车系统是否正常,确保货物是被正确固定的.出于此目的,有必要做一下简短的提升和下降检测。

2.5 载重链检查

检查载重链表面是否润滑,链条表面是否有损坏,是否变形,有裂痕,磨损或者腐蚀的痕迹。

2.6 止索环的检查

止索环必须是连接在链条的环扣内（如图10）。

2.7 检查上下吊钩

检查上下吊钩有无变形，损坏，裂痕，磨损或者腐蚀印。

2.8 起重链的复检

所有配备有单条起重链或多条起重链的葫芦在初次使用前都要进行检查,检查链条是否纠结或者缠绕。多条起重链的葫芦可能会因为钩座反转而使得链条纠结（如图8）。起重链的装置必须如图9所示。焊接的直立链结必须背对着起重链轮。

3. 功能/操作

3.1 提升货物

以顺时针方向拉动手拉链可以提升重物(如图10)。

必须把货物放置到钩子的里部并且关闭保险片。千万不要直接把货物固定到钩子的尖上面就开始使用。同样也适用于上吊钩（如图7）。

3.2 下降货物

以逆时针方向拉动手拉链可以使重物下降(如图10)。

3.3 YALE超载保护装置（可供选择）

超载保护装置是在出厂前预设的，以额定负载的1.2倍设置。当超过预设置的超载限制，保护装置就会被自动启动，手拉链同时自动锁紧。提升与下降同样适用。

3.4 检查/保养

为了确保葫芦总是在一个安全的状态下工作，必须由专业人士检查/保养。检查工作要每年做一次，除非特别恶劣的工作条件使得葫芦的寿命特别低。专业人士要负责检查葫芦是否被损坏，腐蚀，磨损或者运作不正常，所有的安全设置是完好的。还要检查刹车，特别要测试一下葫芦的额定负载能力。如果葫芦已经很旧了，有必要拆开检查一下零件。如果要修理葫芦的话一定要用YALE的零件并且由专业的工人来进行。

建议使用者自行检查。

Correct operation

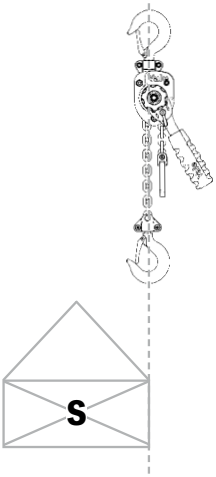

Fig. 1

Incorrect operation (Examples)

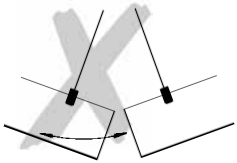

Fig. 2

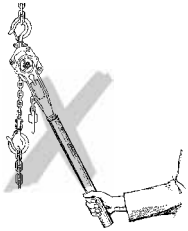

Fig. 3

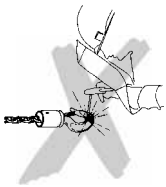

Fig. 4

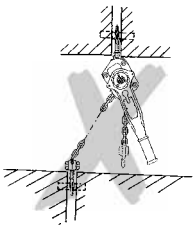

Fig. 5



Fig. 6



Fig. 7

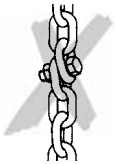

Fig. 8



Fig. 9



Fig. 10

6. 描述

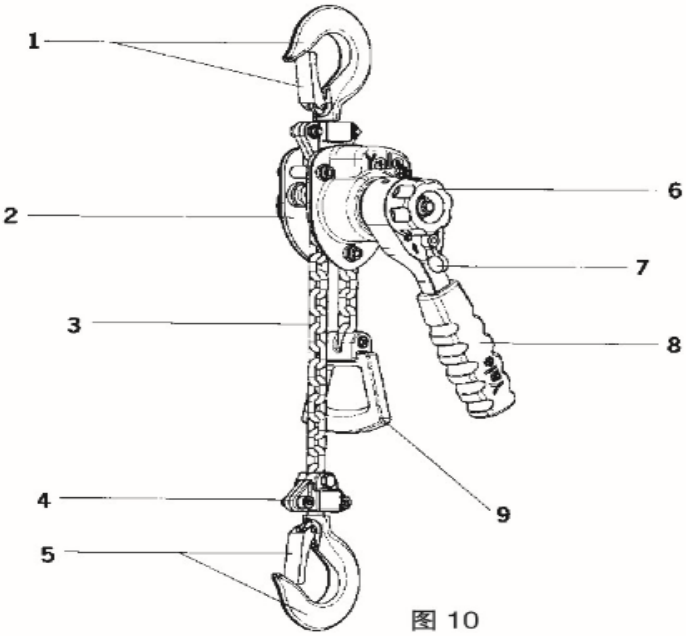

图 10

1 上吊钩和保险片

2 外壳

3 起重链

4 下吊钩座

5 下吊钩配保险片

6 手轮

7 换向手柄

8 手柄

9 止索环

链条缠绕

Fig. 12

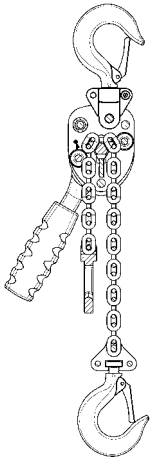

250 / 500 kg

Fig. 13

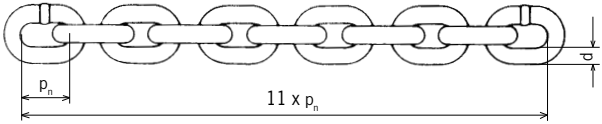

d = **链条公称直径**

d_1, d_2 = **实际尺寸**

$$d_m = \frac{d_1 + d_2}{2} \leq 0{,}9\ d$$

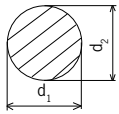

Fig. 14

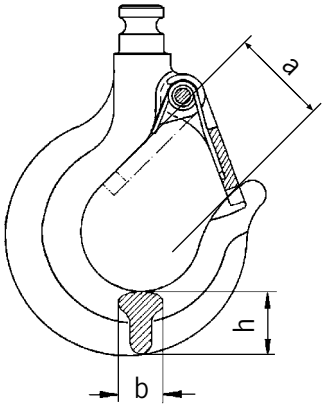

Yalehandy		250	500
载荷	[kg]	250	500
链条行数		1	1
链条规格尺寸 d x p_n	[mm]	4,0 x 12,0	4,0 x 12,0
KMin. 净空尺寸	[mm]	240	282
手柄长度	[mm]	160	160
额定载荷手扳力	[daN]	25,0	25,0
标准提升净重	[kg]	2,2	2,8
拉紧力 S_{TF}	[daN]	250	500
手扳力 S_{HF}	[daN]	25,0	25,0

Tab. 1

链条尺寸及极限磨损

Yalehandy			250	500
链条规格		[mm]	4,0 x 12,0	4,0 x 12,0
等级			T	T
直径	$d_{nom.}$	[mm]	4,0	4,0
	$d_{min.}$	[mm]	3,6	3,6
节距	$p_{n\ nom.}$	[mm]	12,0	12,0
	$p_{n\ max.}$	[mm]	12,6	12,6
11节长度	11 x $p_{n\ nom.}$	[mm]	132,0	132,0
	11 x $p_{n\ max.}$	[mm]	136,0	136,0

Tab. 2

吊钩尺寸

Yalehandy			250	500
吊钩开口	$a_{nom.}$	[mm]	21,0	24,0
	$a_{max.}$	[mm]	23,1	26,4
吊钩宽度	$b_{nom.}$	[mm]	14,0	12,0
	$b_{min.}$	[mm]	13,3	11,4
吊钩长度	$h_{nom.}$	[mm]	20,0	17,0
	$h_{min.}$	[mm]	19,0	16,2

Tab. 3

零件订货资料

只有经过培训的技术人员才能对本产品进行维护。更多信息，请联系 COLUMBUS McKINNON 或离您最近的经销商。

这些产品的设计和构造用于提供长期无故障服务。当某些部件磨损严重时，可能需要订购和安装新部件以替换磨损件。 为了您的方便及未来作参考，建议记录以下信息：

型号 _____
序号 _____
购买日期 _____

订购替换件时，请注明以下内容：

1. 铭牌上注明的型号和序号。
2. 本手册中所示的部件号和部件描述。
3. 所需数量。

注意：订购替换零件时，建议根据需要同时考虑订购螺母、螺栓、开口销等。这些零件可能在拆卸过程中损坏或丢失，或者由于清洁剂的原因不适合继续使用。

Yale*handy* 250 爆炸图

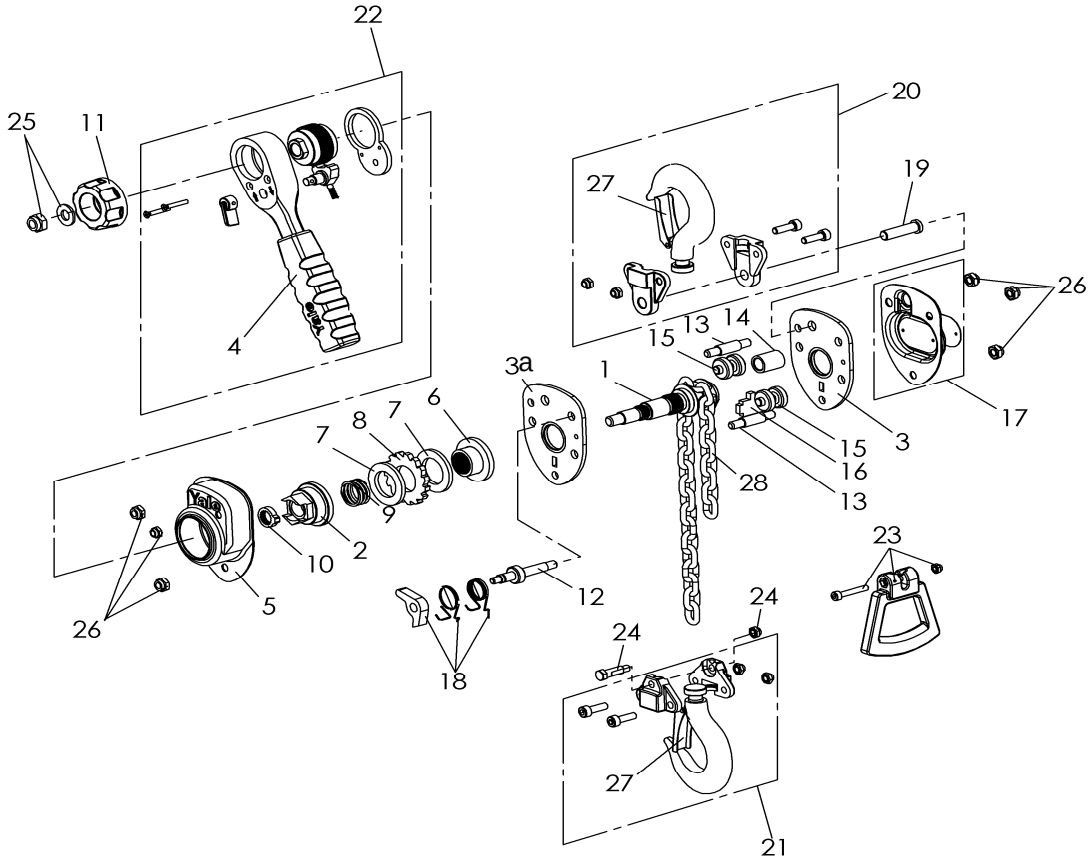

Yale*handy* 250 配件清单

Pos.	Artikel-Nr. / Part No. / Pièce No.	Description	Menge / Quantity / Quantity
1	00230161	Liftwheel	1
2	00230138	Ratchet	1
3	00230258	Sideplate assy	1
3a	80125002	Sideplate assy	1
4	00230153	Grip	1
5	00230124	Housing cover	1
6	00230113	Disc hub	1
7	00210001	Friction disc	2
8	00230114	Ratchet disc	1
9	00230130	Spring	1
10	00230117	Check washer	1
11	00230155	Hand wheel	1
12	00230120	Spacer pin	1
13	00230119	Spacer pin	2
14	00230121	Spacer tube	1
15	00230115	Guide roller	2
16	00230116	Stripper	1
17	00230320	Housing cover assy	1
18	00230259	Brake pawl assy	1
19	00230131	Suspension bolt	1
20	00230152	Hook assy	1
21	00230137	Bottom block assy	1
22	00230164	Hand lever assy	1
23	00230260	Chain end stop assy	1
24	00230261	Chain bolt assy	1
25	00230262	Hex. nut and washer	1
26	00230288	Hex. Nut	1
27	00230168	Safety latch kit	2
28	02100004	Load chain	1

Yale*handy* 500 爆炸图

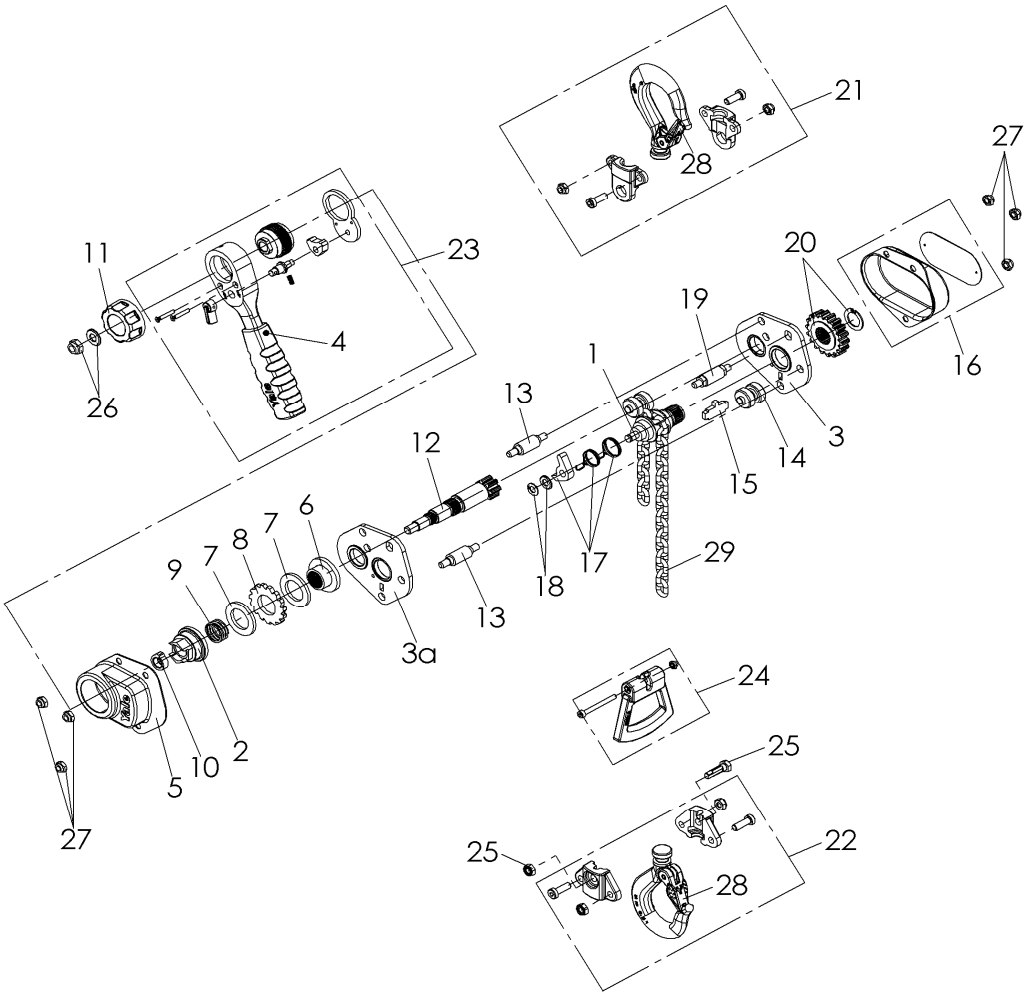

Yale*handy* 500 配件清单

Pos.	Artikel-Nr. / Part No. / Pièce No.	Description	Menge / Quantity / Quantity
1	00230329	Liftwheel	1
2	00230138	Ratchet	1
3	00230328	Sideplate assy	1
3a	00230387	Sideplate assy	1
4	00230153	Grip	1
5	00230332	Housing cover	1
6	00230113	Disc hub	1
7	00210001	Friction disc	2
8	00230114	Ratchet disc	1
9	00230130	Spring	1
10	00230117	Check washer	1
11	00230155	Hand wheel	1
12	00230330	Drive pinion	1
13	00230331	Spacer pin	2
14	00230335	Guide roller	2
15	00230340	Stripper	1
16	00230347	Housing cover assy	1
17	00230259	Brake pawl assy	1
18	00230348	Washer and retaining ring	1
19	00230336	Suspension bolt	1
20	00230350	Gear assy	1
21	00230351	Hook assy	1
22	00230342	Bottom block assy	1
23	00230164	Hand lever assy	1
24	00230260	Chain end stop assy	1
25	00230352	Chain bolt assy	1
26	00230262	Hex. nut and washer	1
27	00230288	Hex. Nut	6
28	00400449	Safety latch kit	2
29	02100004	Load chain	1
30	00230353	Sleeve	1

Shanghai Sales Office
上海办公室(中国区销售总部)
地址：中国上海浦东新区张江高科技园区毕升路 289 弄 6 号 501-502 室
邮编: 201204
电话: 86 21 38820620
传真: 86 21 38820619

Hangzhou Sales Office
杭州办公室(中国区生产总部)
地址：中国浙江杭州高新技术开发区之江科技工业园南环路 3350 号
邮编: 310053
电话: 86 571 8669 0576
传真: 86 571 8669 6368

更多销售中心：
北京/西安/广州/武汉/沈阳/成都/天津/长沙

Singapore office
Columbus McKinnon Singapore Pte Ltd
100D, Pasir Panjang Road, #05-02
Melssa, Singapore 118520
Tel: 65 6567 2166
Fax: 65 6425 6433

India
Tel: 91 44 435239 55

Japan
Tel: 81 80 3204 5126

South Korea
Tel: 82 10 3664 0847

Indonesia
Tel: 62 812 2716033

Thailand
Tel: 66 81 542 5588

www.cmco-cn.com
www.cmworks.com

本样册仅供参考，产品不定期更新，确定合同前请与 CM 销售人员联系。

请联系我们的授权经销商

© 2019 Columbus McKinnon Industrial Products GmbH